OLYMPUS SASHIKO KIT SHOULDER BAG

SASHIKO 41

Finished side: 42 cm x 42cm

Read before starting:

Check the content. Enough thread are included as long as you stitch following the instruction.

This kit includes:
Fabric: Olympus #4500 Sashiko fabric (Navy)
This bag is half-finished.
Thread: Olympus Sashiko thread
White(Thick) 2 skeins
Others: Olympus needle and thimble

How to handle the thread

Look for the extra loop of thread tired around the skein. Cut through all the threads at the knot to make 1-meter threads.
Pull individual threads from the skein as needed.

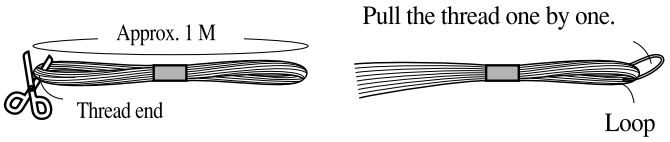

How to stitch

Stitching lines printed on the right side of the fabric are washable. Wash out after finishing all the stitches.

Pull the thread after every few stitches.
This will prevent the twisting of thread.
Be careful not to pull the thread too hard.

To begin stitching; insert the needle, from the wrong of the fabric, 3 stitches ahead of the starting point. Make 3 small stitches back to the starting point. Begin the regular stitches by covering the small stitches.

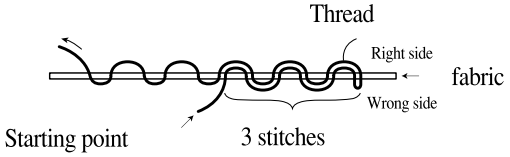

To end stitching; at the ending point, bring the needle to the wrong side of the fabric, make 3 stitches backward, being carefull not to go over the regular stitches.

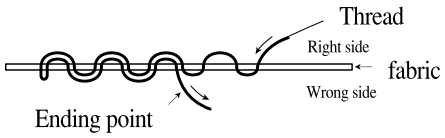

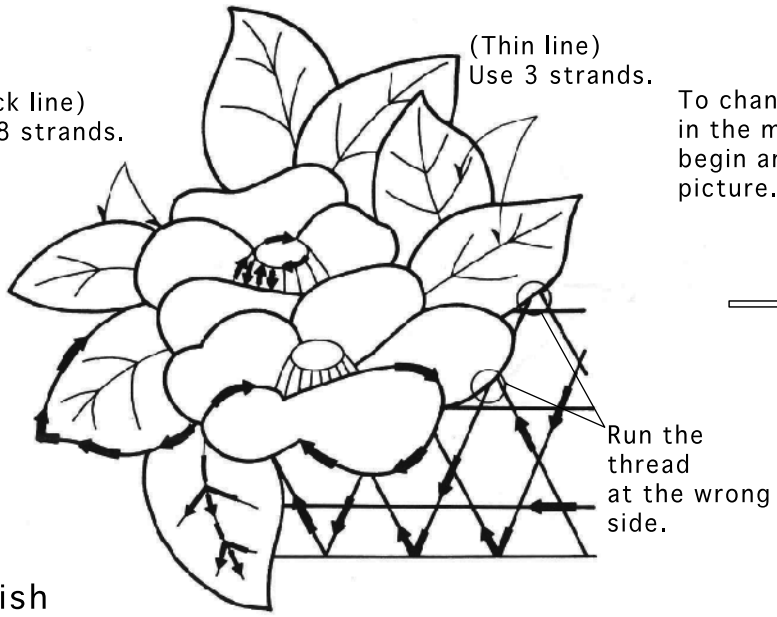

To change the thread: when changing the thread in the middle of stitching, use the methods to begin and end stitching, aas shown in the below picture.

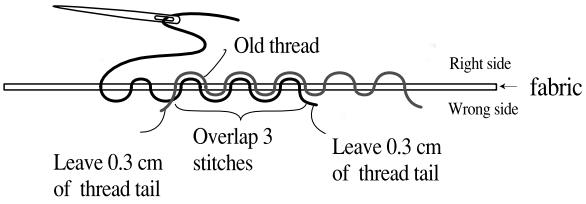

How to finish

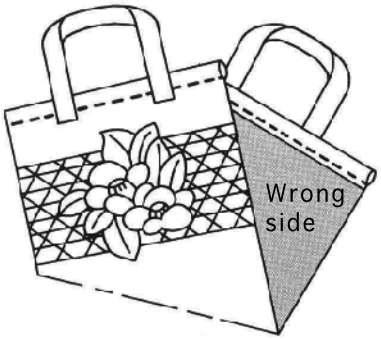

(1) After stitching all lines, finish the bag.

(2)

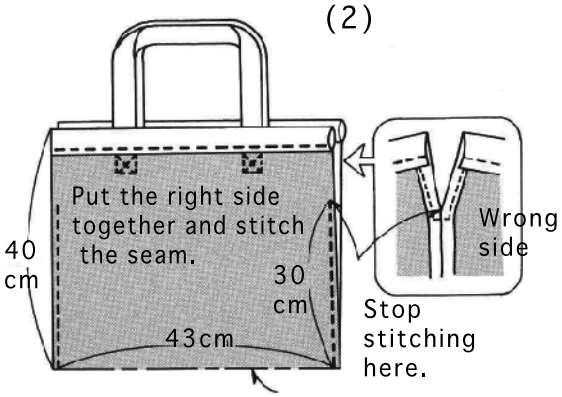

(3) Finished bag

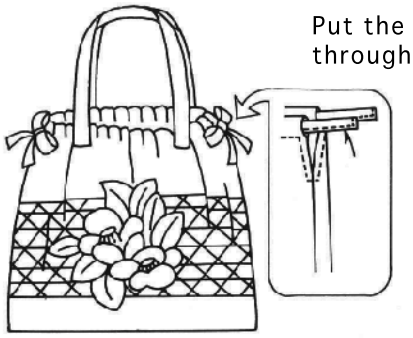

OLYMPUS THREAD MFG. CO., LTD
(ALL RIGHTS RESERVED)